Series 7

Protection Tube Assemblies and Replacement Thermocouple Elements

Protection tube assembly type thermocouples are designed for high temperature applications such as ovens, kilns, or other processes. Metal protection tubes can be used in applications ranging from 1200°F to 2100°F. Ceramic tubes can be used in applications from 1200°F to 3400°F.

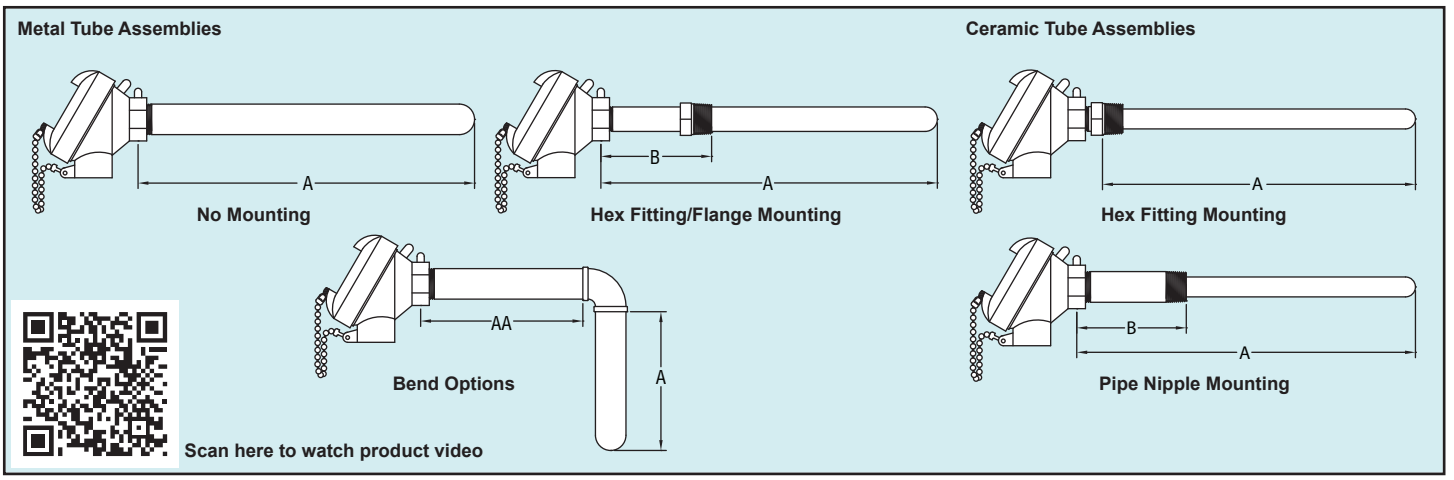

Replacement Sensor Elements

Replacement sensor elements are available as separate parts. All rules regarding lengths and fittings apply. Use the standard Order Code, using a '0' for the hardware type, '0' for mounting, '0' for sensor terminals, and '0' for tube O.D. See example below.

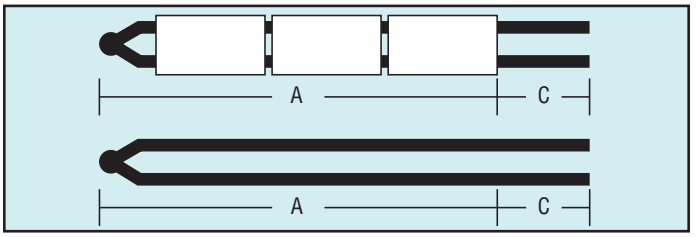

To order use Order Chart below. Specify "0" for Tube Type.
(e.g. - Type K 8 ga. insulated element 12˝ long is 7K000-110-121-12-00-15)

To order use Order Chart below. Specify "0" for Tube Type.
(e.g. - Type K 14 ga. bare element 12˝ long is 7K000-110-311-12-00-15)

Model Coding

Fill in the appropriate numbers or letters to specify the probe of your choice. Fill in all boxes. If an item or dimension does not apply, fill those boxes with zeros '0'.

7 □ □ □ □ – □ □ □ – □ □ □ – □ □ – □ □ – □ □

* ** *** — A IN INCHES — AA/B IN INCHES — C IN INCHES

15 – 1.5˝
00 – Head Assembly

SENSOR TYPE
0 – None
J – T/C
K – T/C
R – T/C
S – T/C

HARDWARE TYPE
0 – None
1 – 304 SS
2 – 316 SS
4 – Inconel® 601
5 – Mullite+
6 – Alumina+
B – Carbon Steel

MOUNTING TYPE
0 – None
1 – Flange
2 – 1/2˝ NPT Hex Fitting (CS)
3 – 3/4˝ NPT Hex Fitting (CS)
4 – 1˝ NPT Hex Fitting (CS)
5 – 1-1/4˝ NPT Hex Fitting (CS)
6 – 1/2˝ NPT Hex Fitting (316SS)
7 – 3/4˝ NPT Hex Fitting (316SS)
8 – 1˝ NPT Hex Fitting (316SS)
9 – 1-1/4˝ NPT Hex Fitting (316SS)
A – 1/2˝ NPT Pipe Nipple (CS)
B – 3/4˝ NPT Pipe Nipple (CS)
C – 1˝ NPT Pipe Nipple (CS)
D – 1-1/4˝ Pipe Nipple (CS)
E – 1/2˝ NPT Pipe Nipple (316SS)
F – 3/4˝ NPT Pipe Nipple (316SS)
G – 1˝ NPT Pipe Nipple (316SS)
H – 1-1/4˝ NPT Pipe Nipple (316SS)

SENSOR TERMINALS
0 – None (Stripped Ends)
H – Snap Cover Head AL w/ 3/4˝ NPT Conduit
E – Screw Cover Head AL w/ 3/4˝ NPT Conduit
G – Screw Cover Head SS w/ 3/4˝ NPT Conduit

ELEMENTS
0 – None
1 – Single
2 – Dual

BEND
1 – Straight
2 – 45°
3 – 90°

TUBE O.D.
0 – None
1 – 1/4˝ Pipe
2 – 1/2˝ Pipe
3 – 3/4˝ Pipe
4 – 1˝ Pipe
A – 0.375˝ O.D.
B – 0.687˝ O.D.
C – 0.750˝ O.D.
D – 1.000˝ O.D.
E – 1.125˝ O.D.

***WIRE GAUGE**
0 – None
1 – 8 AWG
2 – 11 AWG
3 – 14 AWG
4 – 20 AWG
5 – 24 AWG (Type R or S only)
6 – 26 AWG (Type R or S only)

****INSULATORS**
0 – N/A (For Assemblies Only)
1 – None
2 – Oval
3 – Round
4 – Without Collar (Type R or S Only)
5 – With Collar

*****JUNCTION**
1 – Standard/TigWeld
2 – Isolated
3 – Twist Weld

Inconel® is a registered trademark of Huntington Alloys Corporation